CABINET/CIRCUIT SPECIFICATIONS

LCV 16-100-12 (MA10905-12, -13, & -21)
w/ Parallel Circuit Capability and Assignable Data Channels
w/ 16 Type J Temperature Inputs
(Type "fj")

Hardware Configuration:

The circuits are housed in a three bay cabinet with one card cage controlling multiple circuits. Each individual circuit contains a separate isolated phase controlled power supply and is directly controlled through a dedicated analog circuit on one of the analog PCBs in the card cage. The LCV parallel capability allows multiple combinations of circuits (connected to the same card cage) to be paralleled. Assignable data channels are also supported with this unit. Each data channel can be assigned to one or more circuits (within its associated card cage) through the VisuaLCN software.

Control Modes:
Charge, Discharge or Rest

Control Mode Parameters:
Current, Voltage, and Power

Data Sample Parameters:
Time, Amps, Volts or Temperature

Limit Conditions:
Current, Voltage, Power, Amp-Hours, Watt-Hours, % Amp Hours Recharge, % Watt Hours Recharge, Temperature, Cell Voltage, Total Test Time, Step Time, -dV max, ±dV/dt, ±dT/dt, Cycles, Loop1, Loop2 and Loop3

Input Power	See Serial Number Nameplate
Cabinet Dimensions (W x D x H)	84.75" x 30.2" x 77.6"
Circuits per Cabinet	16 Circuits
Maximum Circuits per Cabinet	16 Circuits
Card Cages per Cabinet	1 Card Cage
Circuit Address Block Size	16 Circuits per Card Cage
Data Acquisition Rate (maximum)	0.1 Second/Data Sample

LCV 16-100-12 (MA10905-12, -13, & -21) CABINET/CIRCUIT SPECIFICATIONS (continued)

Charge Voltage Range	0 to 18 Volts
Discharge Voltage Range	18 to 0 Volts
Resolution	0.001 Volts
Max. Charge/Discharge Current (per cabinet)	1600 Amps
Max. Charge/Discharge Current (per circuit)	100 Amps
Resolution	0.01 Amps
Max. Charge/Discharge Power (per cabinet)	28800 Watts
Max. Charge/Discharge Power (per circuit)	1800 Watts
Resolution	0.1 Watt
Max. Battery Cable Voltage Drop	1.00 Volts

(includes total voltage drop across all negative & positive current carrying leads whether circuit is connected to cell switching cables or not.)

Assignable Data Channel Inputs: 2

Temperature:	Qty per Card Cage	16
	Input Type	Type T Thermocouples
	Range	-40°C to +200°C
	Resolution	0.5°C

Bitrode Bill Of Material

CA10344-37

Sub	PART_ID	DESCRIPTION	Qty
0	CF10315-01	LCV 8.5" POWER MOD. SILKSCREEN FRT PANEL	0.00
0	CS10344-37	LCV100-12 SCHEMATIC	0.00
0	CT10344-37	LCV100-12 LAYOUT	0.00
0	CW10344-13	LCV100-12 POWER MODULE WIRELIST	0.00
0	02-24815	SNUBBER .10UF 47 OHM 600VDC/250VAC	7.00
0	02-25095	CAP 64000UF 63V MF	2.00
0	03-20597	RES 30 OHM 50W 1%	3.00
0	04-16827	DUAL SCR MOD. 1600V 150A	5.00
0	04-24946	DUAL DIODE MODULE 400V 60A	1.00
0	08-24906	FUSE 125A 80V-DC	2.00
0	11-24987	FAN 5.0" 120V 120CFM	2.00
0	12-20002	CHOKE 1MH 100A 120HZ-360HZ	1.00
0	13-11564	CONN PLUG 2 PIN FEMALE	1.00
0	13-11576	CONN 3 PIN FEMALE	1.00
0	13-19375	CONN 16 PIN MINI-FIT PLUG	1.00
0	13-20361	PLUGGABLE TB 10-POS	2.00
0	13-20527	CONN 6 PIN MINI-FIT	1.00
0	13-21888	CONN HOUSING 120A 1P BLUE	4.00
0	13-22089	CONN HOUSING 175A 2P GRAY	1.00
0	13-22350	CONTACT PIN 120A 4-GA WIRE	4.00
0	13-23167	CONN 18 PIN MINI-FIT	1.00
0	13-23967	CONN 4-POS HOUSING	1.00
0	13-25643	CONTACT PIN 175A #4 WIRE	2.00
0	16-27463	CB AUX CONTACT (S800 SERIES)	1.00
0	16-27464	CB 100A 690VAC 3-POLE(S800 SERIES)K-TRIP	1.00
0	18-23366	PANEL LITE GREEN "VDE" 115V	1.00
0	19-18138	THERMOSTAT 210-230F OPEN/RISE	2.00
0	20-25653	SHUNT 200A 200MV	1.00
0	27-17392	HANDLE ALUM. 6" X 1.5" 5/16" D 10-32	2.00
0	40-12807	10GA 105STR SIS GRAY	11.00
0	40-12824	4GA WELDING CABLE	26.00

Bitrode Bill Of Material

CA10344-37

Sub	PART_ID	DESCRIPTION	Qty
0	40-14597	18GA BLACK	8.68
0	40-14613	18GA ORANGE/BLACK	3.67
0	40-14628	18GA BLUE/WHITE	6.10
0	40-14629	18GA BLUE/RED/ORANGE	5.01
0	40-14632	18GA GREEN	8.68
0	40-14634	18GA WHITE	23.92
0	40-14635	18GA WHITE/BLACK	3.67
0	40-14637	18GA WHITE/RED	3.67
0	40-14638	18GA WHITE/ORANGE	3.26
0	40-14639	18GA WHITE/BLUE	3.34
0	40-14642	18GA WHITE/BLACK/VIOLET	3.34
0	40-14646	18GA BLACK/WHITE	4.26
0	40-14649	18GA RED	19.58
0	40-14650	18GA RED/WHITE	4.26
0	40-14651	18GA RED/BLUE/WHITE	3.34
0	40-14652	18GA ORANGE	4.26
0	40-14665	18GA GREEN/RED	4.26
0	40-14666	18GA GREEN/BLACK	8.27
0	40-14670	18GA WHITE/YELLOW	3.67
0	40-14671	18GA WHITE/GREEN	7.18
0	40-14690	18GA RED/GREEN/WHITE	3.76
0	40-19487	22GA BLUE WIRE	6.85
0	40-19489	22GA WHITE WIRE	6.85
0	46-10628	CRIMP FASTON .110 X .02 (SEE NOTE)	3.00
0	46-10896	RING LUG 12-10GA, #10 STUD	9.00
0	46-10899	RING LUG 12-10GA, #6 STUD	3.00
0	46-10904	RING LUG 16-14GA, 1/4" STUD	1.00
0	46-10909	RING LUG 22-18GA, #10 STUD	4.00
0	46-11083	RING LUG 4GA 1/4"HOLE	7.00
0	46-11084	RING LUG 4GA 3/8"HOLE	3.00
0	46-11085	RING LUG 4GA 5/16"HOLE	5.00
0	46-11544	MALE BURNDY PIN #18 - 16	3.00

Bitrode Bill Of Material

CA10344-37

Sub	PART_ID	DESCRIPTION	Qty
0	46-13450	RECEPTACLE	2.00
0	46-14809	RING LUG 3-4WR #10 HOLE	5.00
0	46-18768	FASTON 22-18 GA, .110 X .032 STUD REEL	19.00
0	46-19048	14GA CRIMP PIN MALE	1.00
0	46-20221	CRIMP PIN MOLEX "REEL"	24.00
0	46-21884A	WIRE MARKERS 5.08MM 1-10	24.00
0	46-22357	FASTON 18-22GA, .250 X .032 STUD	1.00
0	46-24716	FAST-ON 16-14 GA, .250 X .032 STUD	1.00
0	46-26759	JST CRIMP PINS	4.00
0	46-28157	FERRULE 18GA RED INSULATED (REEL)	12.00
0	46-28517	FERRULE 4GA NON-INSULATED	6.00
0	50-11731	CAP CLAMP 2-1/2	2.00
0	BA10582-10	LCV100-12 GEN. 4 POWER MODULE CTRL. BRD.	1.00
0	BA10583-01	See NoteLCV 16-FET DRIVE/SOURCE RES.BRD.	1.00
0	FA10980-01	LCV 8.5" POWER MODULE WELD ASSY	1.00
0	FF15131-02	LCV 4X50W RESISTOR MTG. BRKT	1.00
0	FF15563-01	LCV 8.50" FAN BRKT.	1.00
0	FF15564-01	LCV 50-48 H/S BRKT.-RIGHT SIDE	1.00
0	FF15564-02	LCV 50-48 H/S BRKT.-LEFT SIDE	1.00
0	FF15564-03	LCV 50-48 H/S BRKT.	2.00
0	FF15565-02	LCV 100A SCR JUMPER	1.00
0	FF15566-02	LCV 100A SCR & DIODE JUMPER	1.00
0	FF15567-02	LCV 100A SCR SW BRIDGE JUMPER	2.00
0	FF15568-10	LCV 100-12 CAP JUMPER	1.00
0	FF15570-01	LCV FUSE BLOCK	2.00
0	FF15571-03	LCV CAP. MTG. BRACKET	1.00
0	FF15573-03	LCV HEATSINK COVER	1.00
0	FF15576-04	LCV POWER MODULE AC INPUT BRKT.	1.00
0	FF15577-01	LCV DC OUTPUT/CTRL BRKT.	1.00
0	FF15579-04	LCV 28 PIN MOLEX CTRL PLATE	1.00
0	FF15749-01	LCV CTRL PLUG-IN SLIDE SPACER	2.00
0	FF15750-01	LCV CTRL PLUG-IN SLIDE RETAINER	2.00

Bitrode Bill Of Material

CA10344-37

Sub	PART_ID	DESCRIPTION	Qty
0	FF16072-01	1/32" G10 INSULATOR	1.00
0	FF16206-01	LCV CAPACITOR BUS BAR	2.00
0	FF16207-04	LCV CAPACITOR BUS BAR SUPPORT	1.00
0	FF17002-01	ABB CIRCUIT BREAKER MTG. BRKT	1.00
0	FF17003-02	ABB CIRCUIT BREAKER MTG. PLATE	1.00
0	FM11422-04	LCV 100A PH CTRL HEATSINK	1.00
0	FM11422-05	LCV100/10 SCR HEATSINK	1.00
0	FM11429-09	LCV 100 AMP 16-FET BUS BAR	1.00
0	FM11506-04	TO-247 FET CLAMP BAR (0.844" SPACING)	8.00
0	FM11512-04	LCV 16-FET/2-FET HEATSINK	1.00
0	FM11560-02	LCV 100A SHUNT BUS SPACER	1.00
0	MM10123-01	SCR WIRING LABEL	0.00
0	PA11003-01	LCV HARNESS CNTRL BRD TO CHASSIS	1.00
0	PA11337-01	LCV P.M. CTRL PLUG-IN ASSY.	1.00

NO.	REVISION	DATE	BY
A	INITIAL RELEASE	06/7/13	HJM

THE CUSTOMER IS GOING TO SUPPLY THEIR OWN OUTPUT LEADS

THERE IS ONE CARD CAGE MODULE (MOUNTED AT THE TOP OF THE CENTER BAY:

THE MPU PLUG-IN ASSY IS MOUNTED IN CARD CAGE SLOT 0.

FOUR ANALOG PCB ASSEMBLIES (INSTALLED IN CARD CAGE SLOTS 1, 2, 3, & 4) ARE CONNECTED TO 16 POWER MODULES (THE 16 LCV POWER MODULES ARE LOCATED IN THE CABINET AS SHOWN BELOW).

FOUR I/O PLUG-IN ASSEMBLIES ARE INSTALLED IN I/O SLOTS 1 & 2 AT THE REAR OF THE CARD CAGE MODULE:

- I/O SLOT #1 HAS AN 8 CHANNEL TYPE "J" TEMPERATURE PLUG-IN ASSY. ALL 8 CHANNELS ARE AVAILABLE AS ASSIGNABLE INPUTS.
- I/O SLOT #2 HAS AN 8 CHANNEL TYPE "J" TEMPERATURE PLUG-IN ASSY. ALL 8 CHANNELS ARE AVAILABLE AS ASSIGNABLE INPUTS.

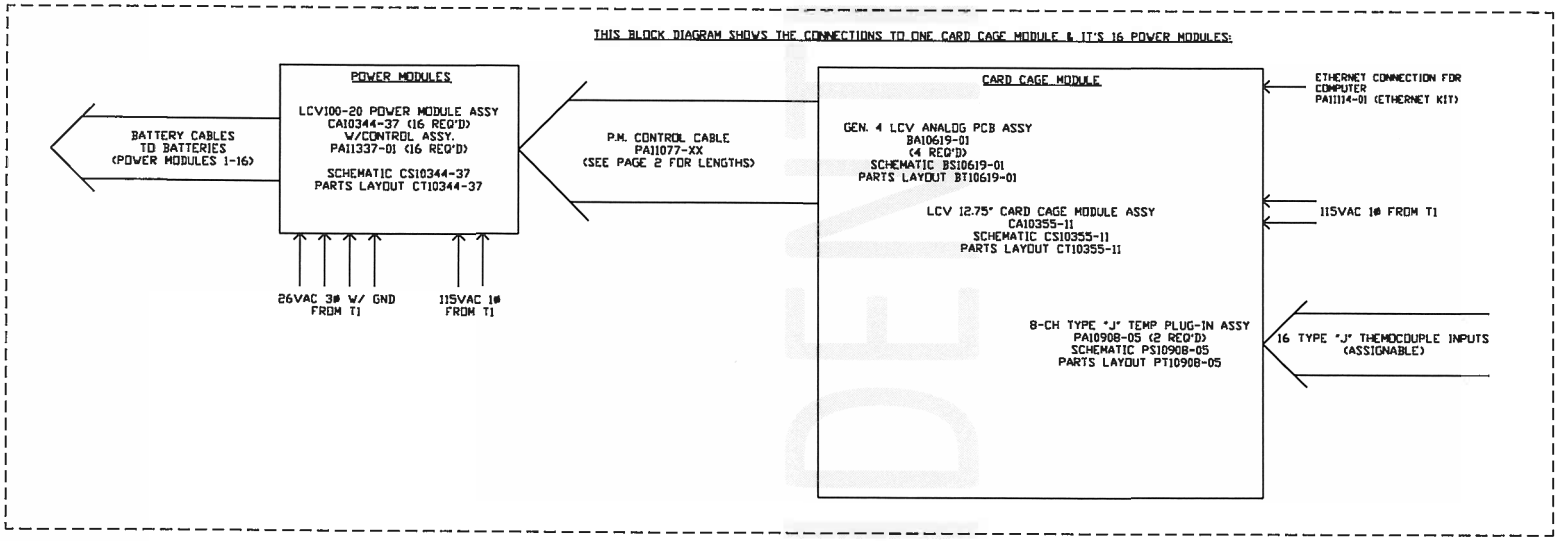

LCV CABINET POWER MODULE LOCATIONS
(FRONT VIEW)

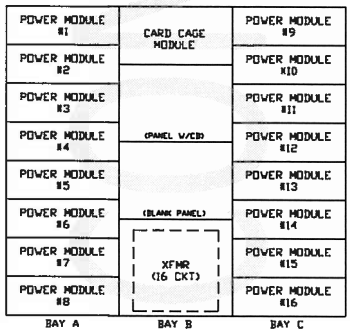

BITRODE

LCV16-100-12 SCHEMATIC

400VAC/3PH/50HZ/90A

DRAWN BY HJM	SCALE	DRAWING SIZE SEE BILL OF MATERIALS
REVISED HJM	DATE 06/7/13	DRAWING NO. MS10905-13
CHECKED	PLAN	

NO.	REVISION	DATE	BY
A	INITIAL RELEASE	06/7/13	MJM

CONNECTORS:

P1CC, P1PM1-P1PM16 = 3 PIN BURNDY SMS3R1
W/ MALE PINS SM16M-1TK6

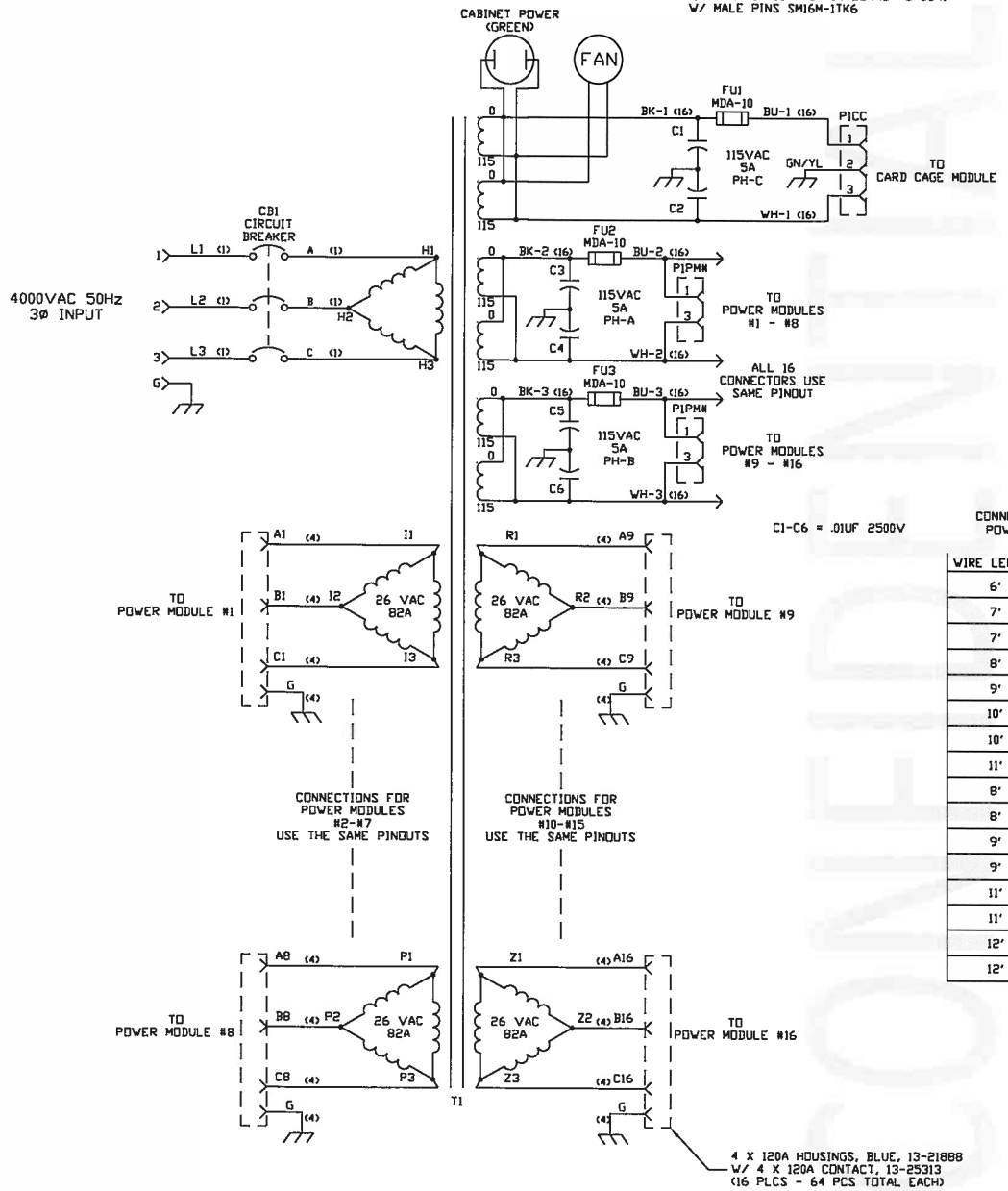

SUFFIX TABLE
CC = CARD CAGE PM = POWER MODULE

LCV CTRL HARNESSES

CONNECTS FROM ANALOG BOARD BA10619-01 TO EACH POWER MODULE AS SHOWN IN THE CHART BELOW. (WIRE ACCORDING TO GS10032-01)

WIRE LENGTH	CTRL HARNESS	TO POWER MODULE
6'	PA11077-06	BAY A / P.M. #1
7'	PA11077-07	BAY A / P.M. #2
7'	PA11077-07	BAY A / P.M. #3
8'	PA11077-08	BAY A / P.M. #4
9'	PA11077-09	BAY A / P.M. #5
10'	PA11077-10	BAY A / P.M. #6
10'	PA11077-10	BAY A / P.M. #7
11'	PA11077-11	BAY A / P.M. #8
8'	PA11077-08	BAY C / P.M. #9
8'	PA11077-08	BAY C / P.M. #10
9'	PA11077-09	BAY C / P.M. #11
9'	PA11077-09	BAY C / P.M. #12
11'	PA11077-11	BAY C / P.M. #13
11'	PA11077-11	BAY C / P.M. #14
12'	PA11077-12	BAY C / P.M. #15
12'	PA11077-12	BAY C / P.M. #16

LCV CABINET POWER MODULE LOCATIONS

(FRONT VIEW)

BAY A	BAY B	BAY C
POWER MODULE #1	CARD CAGE MODULE	POWER MODULE #9
POWER MODULE #2		POWER MODULE #10
POWER MODULE #3		POWER MODULE #11
POWER MODULE #4	(PANEL W/CB)	POWER MODULE #12
POWER MODULE #5		POWER MODULE #13
POWER MODULE #6	(BLANK PANEL)	POWER MODULE #14
POWER MODULE #7	XFMR (16 CKT)	POWER MODULE #15
POWER MODULE #8		POWER MODULE #16

BITRODE

LCV16-100-12 SCHEMATIC

400VAC/3PH/50HZ/90A

DRAWN BY	SCALE	MATERIAL
MJM		SEE BILL OF MATERIALS
DESIGN MJM	DATE 06/7/13	DRAWING NO. 10905-13
CHECKED	FLAT	

NO.	REVISION	DATE	BY
A	NEW RELEASE	06/7/13	HJM

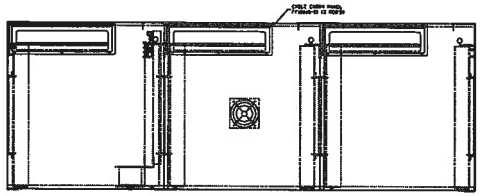

TOP VIEW

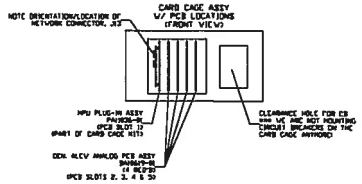

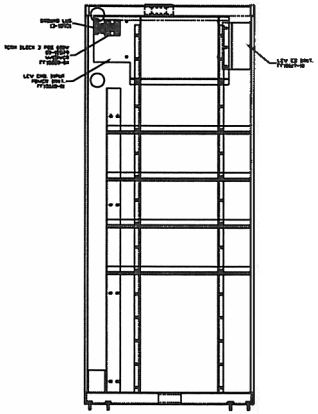

LEFT CENTER VIEW

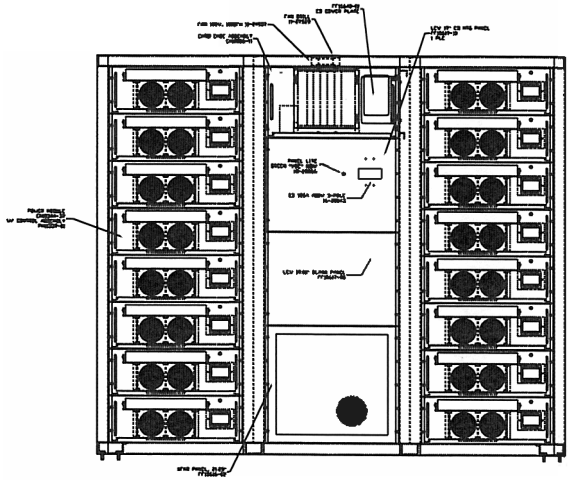

FRONT VIEW

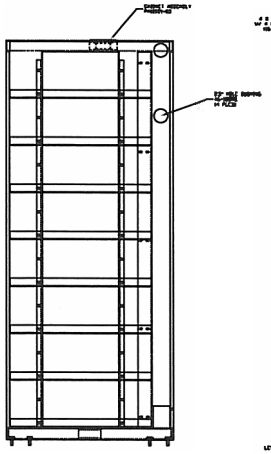

RIGHT CENTER VIEW

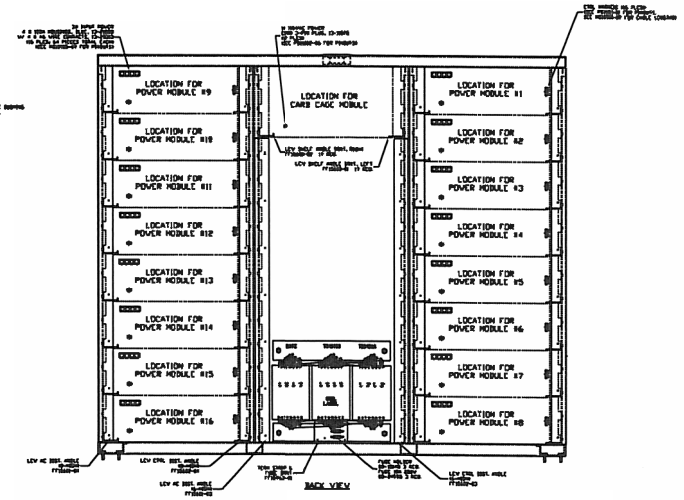

BACK VIEW

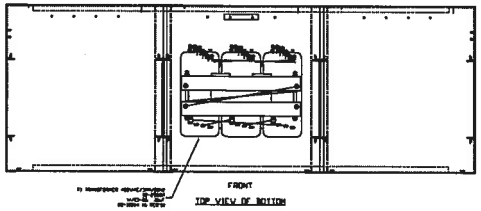

TOP VIEW OF BOTTOM

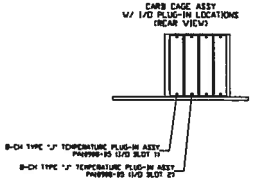

BITRODE

LCV16-100-12 LAYOUT

TOLERANCE	DRAWN BY	SCALE	MATERIAL
XXX = ±.005"	HJM		
XX = ±.015"	REVISED HJM	DATE 06/7/13	DRAWING NO. MT10905-13
X = ±.250"	CHECKED	PLAN	

NO.	REVISION	DATE	BY
A	NEW RELEASE	07/12/12	DK

SUFFIX TABLE

CA = P.M. CONTROL PLUG-IN ASSY
FB = FET BRD
PM = POWER MODULE
SF = SCR FIRING BRD

CONNECTORS:

J2PM = 4 PIN BURNDY SM12M1 W/ MALE PINS SM16M-11T66

J8PM = PART OF PA11003-01

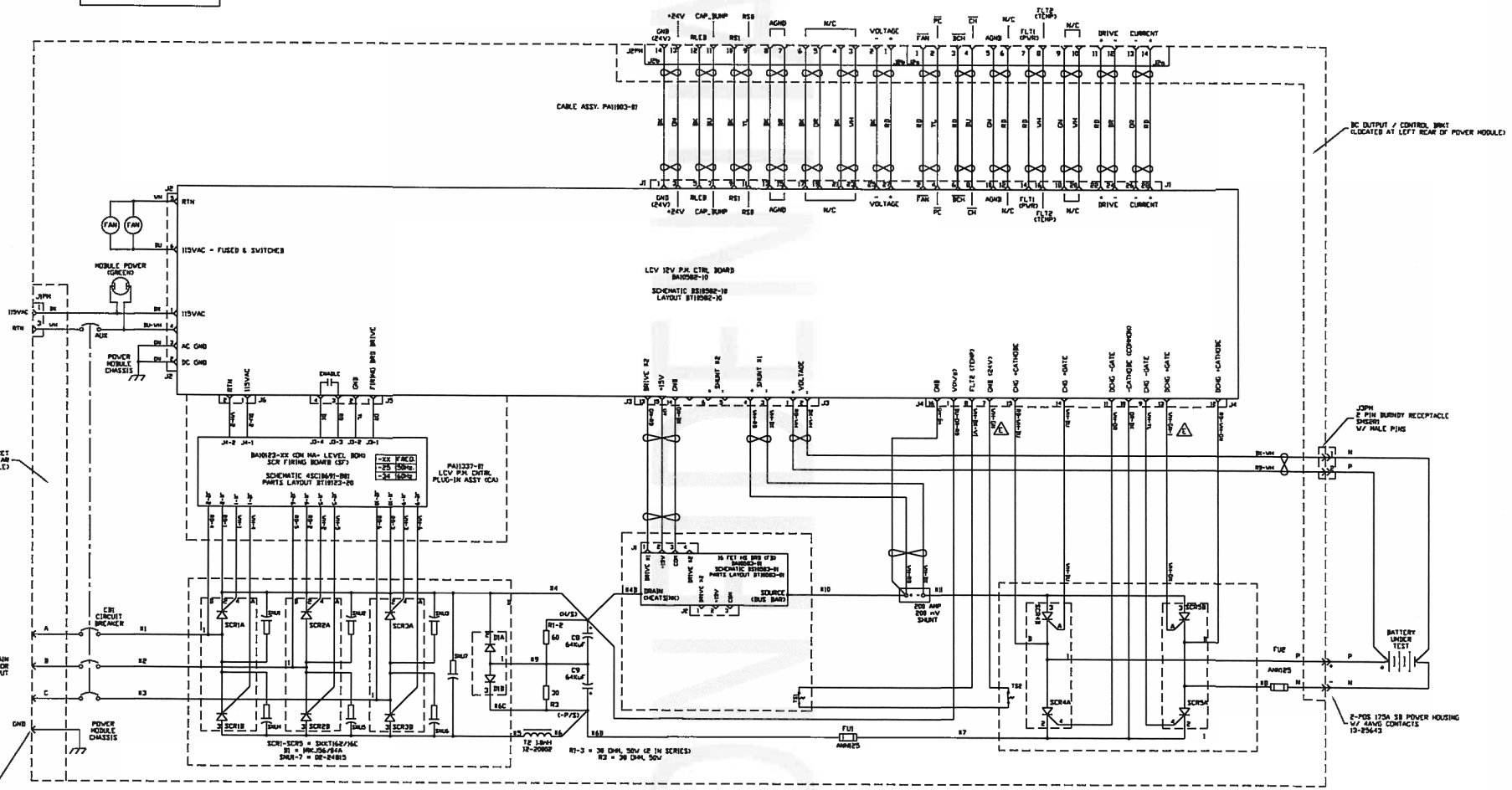

BITRODE

LCV100-12 POWER MODULE
GENERATION 4

DRAWN BY DK	SCALE	MATERIAL
REVISED DK	DATE 07/12/12	DRAWING NO. CS10344-37
CHECKED	FILE	

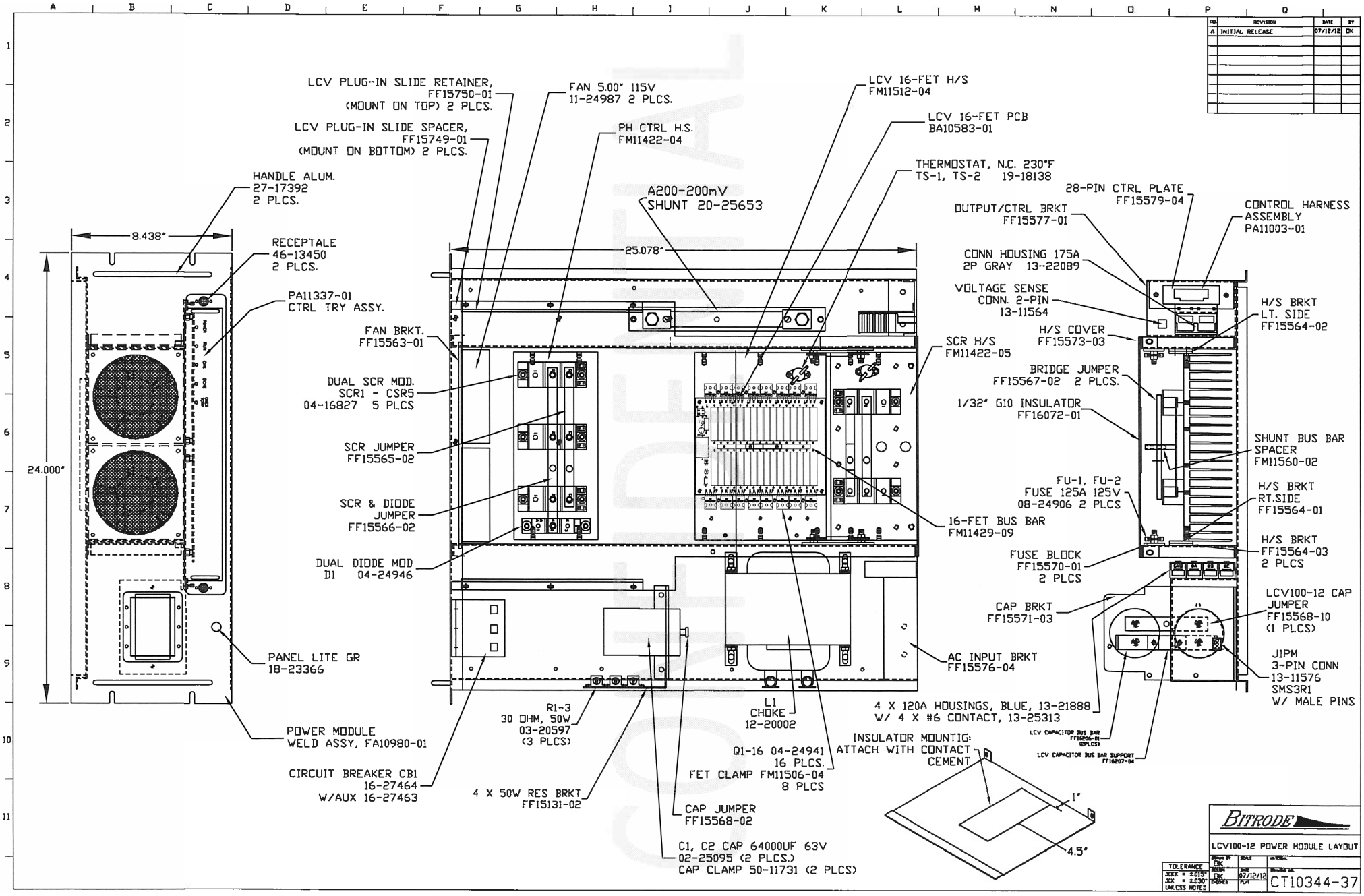
LCV PLUG-IN SLIDE RETAINER, FF15750-01 (MOUNT ON TOP) 2 PLCS.
LCV PLUG-IN SLIDE SPACER, FF15749-01 (MOUNT ON BOTTOM) 2 PLCS.
HANDLE ALUM. 27-17392 2 PLCS.
8.438"
RECEPTALE 46-13450 2 PLCS.
PA11337-01 CTRL TRY ASSY.
24.000"
PANEL LITE GR 18-23366
POWER MODULE WELD ASSY, FA10980-01
CIRCUIT BREAKER CB1 16-27464 W/AUX 16-27463
FAN 5.00" 115V 11-24987 2 PLCS.
PH CTRL H.S. FM11422-04
A200-200mV SHUNT 20-25653
25.078"
FAN BRKT. FF15563-01
DUAL SCR MOD. SCR1 - CSR5 04-16827 5 PLCS
SCR JUMPER FF15565-02
SCR & DIODE JUMPER FF15566-02
DUAL DIODE MOD D1 04-24946
R1-3 30 OHM, 50W 03-20597 (3 PLCS)
4 X 50W RES BRKT FF15131-02
CAP JUMPER FF15568-02
C1, C2 CAP 64000UF 63V 02-25095 (2 PLCS.) CAP CLAMP 50-11731 (2 PLCS)
L1 CHOKE 12-20002
Q1-16 04-24941 16 PLCS. FET CLAMP FM11506-04 8 PLCS
LCV 16-FET H/S FM11512-04
LCV 16-FET PCB BA10583-01
THERMOSTAT, N.C. 230°F TS-1, TS-2 19-18138
SCR H/S FM11422-05
16-FET BUS BAR FM11429-09
AC INPUT BRKT FF15576-04
INSULATOR MOUNTIG: ATTACH WITH CONTACT CEMENT
1"
4.5"
28-PIN CTRL PLATE FF15579-04
OUTPUT/CTRL BRKT FF15577-01
CONTROL HARNESS ASSEMBLY PA11003-01
CONN HOUSING 175A 2P GRAY 13-22089
VOLTAGE SENSE CONN. 2-PIN 13-11564
H/S COVER FF15573-03
H/S BRKT LT. SIDE FF15564-02
BRIDGE JUMPER FF15567-02 2 PLCS.
1/32" G10 INSULATOR FF16072-01
SHUNT BUS BAR SPACER FM11560-02
FU-1, FU-2 FUSE 125A 125V 08-24906 2 PLCS
H/S BRKT RT.SIDE FF15564-01
FUSE BLOCK FF15570-01 2 PLCS
H/S BRKT FF15564-03 2 PLCS
CAP BRKT FF15571-03
LCV100-12 CAP JUMPER FF15568-10 (1 PLCS)
J1PM 3-PIN CONN 13-11576 SMS3R1 W/ MALE PINS
4 X 120A HOUSINGS, BLUE, 13-21888 W/ 4 X #6 CONTACT, 13-25313
LCV CAPACITOR BUS BAR FF16206-01 (2PLCS)
LCV CAPACITOR BUS BAR SUPPORT FF16207-04
REV HISTORY
A INITIAL RELEASE 07/12/12 DK
BITRODE
LCV100-12 POWER MODULE LAYOUT
DRAWN BY DK
DATE 07/12/12
TOLERANCE .XXX = ±.015" .XX = ±.030" UNLESS NOTED
CT10344-37